1852367
Emissary Armoire

Parts and Hardware List

A.	Top Assembly	1 pc
B.	Top Side Panels	2 pcs
C.	Top Back Panel	1 pc
D.	Doors	2 pcs
E.	Top Stretcher	1 pc
F.	Shelf	1 pc
G.	Center Panel	1 pc
H.	Bottom Side Panels	2 pcs
I.	Bottom Back Panel	1 pc
J.	Bottom Panel	1 pc
K.	Bottom Stretcher	1 pc
L.	Feet	4 pcs
M.	Drawer Fronts	2 pcs
N.	Drawer Side Panels	4 pcs
O.	Drawer Back Panels	2 pcs
P.	Drawer Bottom Panels	2 pcs
Q.	Door and Drawer Pulls	6 pcs
R.	Phillips Head Machine Screws	6 pcs
S.	Short Phillips Flat Head Wood Screws	12 pcs
T.	Long Phillips Flat Head Wood Screws	26 pcs
U.	Short Phillips Pan Head Wood Screws	40 pcs
V.	Long Phillips Pan Head Wood Screw	1 pc
W.	Allen Head Bolts	4 pcs
X.	Lock Washer	4 pcs
Y.	Flat Washer	4 pcs
Z.	Eccentric Cams	6 pcs

1852367
Emissary Armoire

Z1.	Connecting Bolts	6 pcs
Z2.	Plastic Caps	6 pcs
Z3.	Confirmat Screws	6 pcs
Z4.	Allen Head Wrench	1 pc
Z5.	Phillips Head Screwdriver	1 pc

∗ Please make sure that you have all the parts and hardware indicated above before you begin assembly of this item.
∗ Use the hardware illustrations to determine the correct piece and size.
∗ This item should be assembled on a soft surface to prevent scratching of the finish during assembly.
∗ This item may require periodic tightening.

1852367
Emissary Armoire

Hardware Illustrations

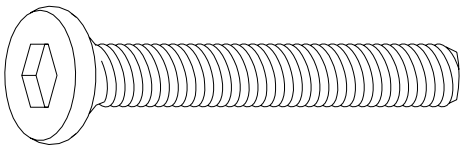

W. Allen Head Bolt

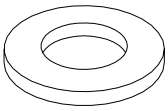

Y. Flat Washer

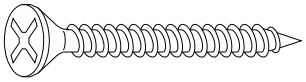

T. Long Phillips Flat Head Wood Screw

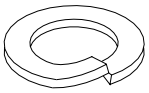

X. Lock Washer

S. Short Phillips Flat Head Wood Screw

Z1. Connecting Bolt

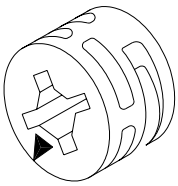

Z. Eccentric Cam

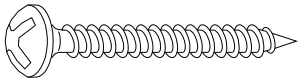

V. Long Phillips Pan Head Wood Screw

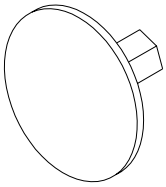

Z2. Plastic cap

U. Short Phillips Pan Head Wood Screw

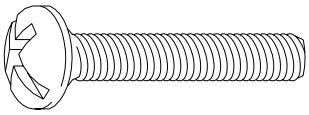

R. Phillips Head Machine screw

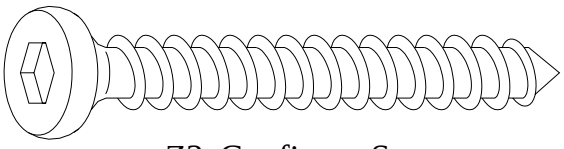

Z3. Confirmat Screw

1852367
Emissary Armoire

Assemble Base Unit

Parts required

G.	Center Panel	1 pc	P.	Drawer Bottom Panels	2 pcs
H.	Bottom Side Panels	2 pcs	Q.	Drawer Pulls	4 pcs
I.	Bottom Back Panel	1 pc	R.	Phillips Head Machine Screws	4 pcs
J.	Bottom Panel	1 pc	T.	Long Phillips Flat Head Wood Screws	26 pcs
K.	Bottom Stretcher	1 pc	U.	Short Phillips Pan Head Wood Screws	16 pcs
L.	Feet	4 pcs	Z3.	Confirmat Screws	6 pcs
M.	Drawer Fronts	2 pcs	Z4.	Allen Head Wrench	1 pc
N.	Drawer Side Panels	4 pcs	Z5.	Phillips Head Screwdriver	1 pc
O.	Drawer Back Panels	2 pcs			

For steps 1 – 7 see Illustration #1 on page 5 of 9.

1. **Attach Bottom Side Panel (H) to Bottom Panel (J)** Insert the exposed dowels of one Bottom Side Panel (H) into pre-drilled holes on the Bottom Panel (J). Make sure the notched edge of the Bottom Side Panel (H) faces the back and the flush block fittings are at the top and face inward. Secure with Confirmat Screws (Z3) using the Allen Head Wrench (Z4).
2. **Attach Bottom Stretcher (K)** Insert exposed dowels of the Bottom Stretcher (K) into the pre-drilled holes near front edge at the center of the Bottom Side Panel (H). Secure with Long Phillips Flat Head Wood Screw (T) using the Phillips Head Screwdriver (Z5).
3. **Attach remaining Bottom Side Panel (H)** Repeat steps 1 – 2 to attach remaining panel.
4. **Attach Center Panel (G)** Align the pre-drilled holes of the Center Panel (G) over the exposed dowels of the Bottom Side Panels (H). Make sure the notched edge of the Center Panel (G) faces the back and the door catches face outward. Secure in place using the Phillips Head Screwdriver (Z5) through the flushblock fittings, turning in a clockwise direction.
5. **Attach Bottom Back Panel (I)** Place the Bottom Back Panel (I) into the notches of the Bottom Side Panels (H), Center Panel (G) and Bottom Panel (J). Secure in place with Short Phillips Pan Head Wood Screws (U) using the Phillips Head Screwdriver (Z5).
6. **Attach Feet (L)** Insert the exposed threads of the Feet (L) into the pre-threaded holes of the Bottom Panel (J). Turn in a clockwise direction.
7. **Assemble Drawers** Align the grooves at the bottom of Drawer Side Panels (N) with the groove at the bottom of one Drawer Front (M). Secure in place with Long Phillips Flat Head Wood Screws (T) using the Phillips Head Screwdriver (Z5). Slide in the Drawer Bottom Panel (P). Next, align the groove at the bottom of the Drawer Back Panel (O) over the Drawer Bottom Panel (P). Secure Drawer Back Panel (O) in place with Long Phillips Flat Head Wood Screws (T). Align the pre-threaded hole in the Drawer Pulls (Q) with the pre-drilled holes on the Drawer Front (M). Secure with Phillips Head Machine Screw (R) using the Phillips Head Screwdriver (Z5). Repeat for other drawer. Insert the drawers into the base unit.

1852367
Emissary Armoire

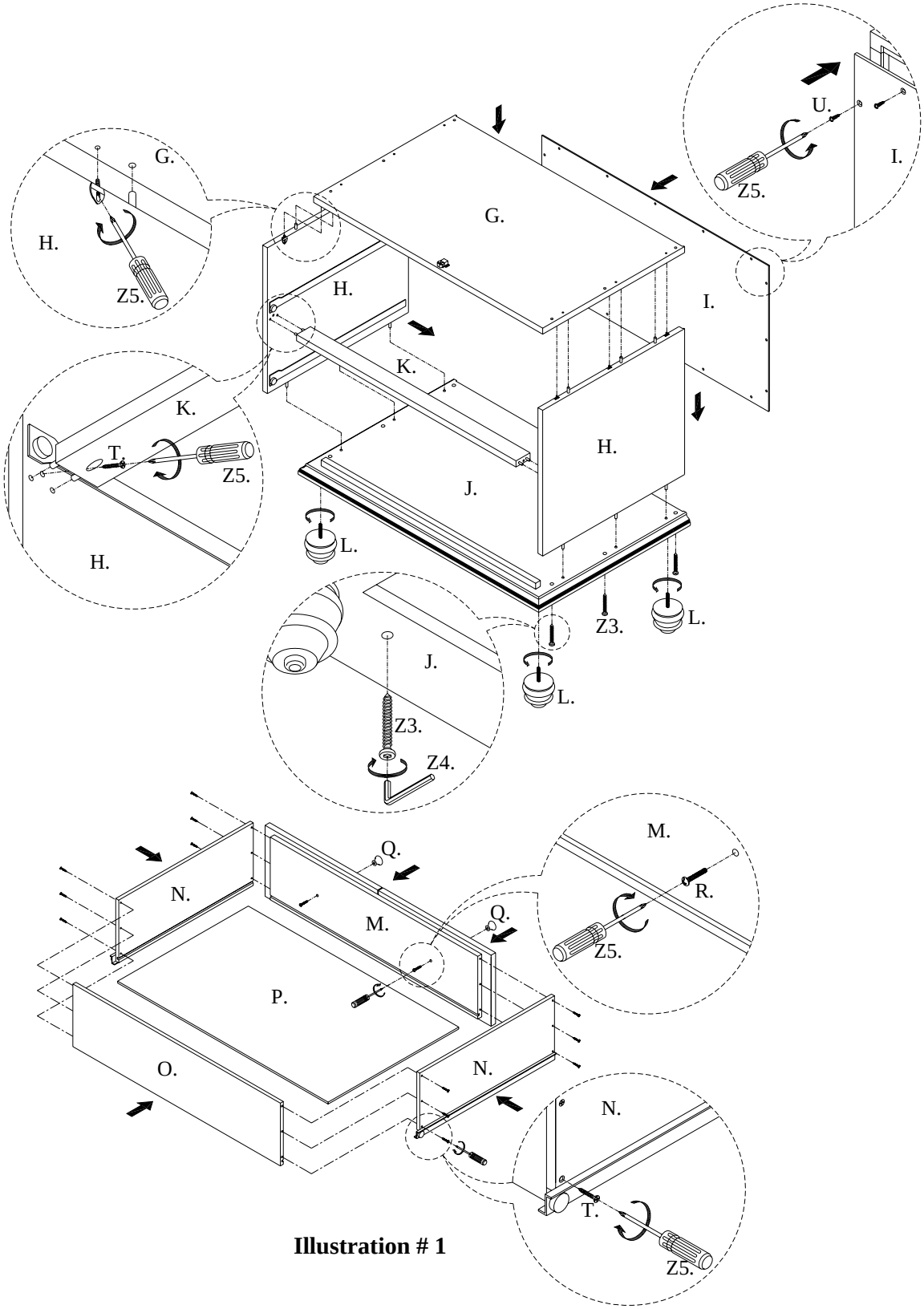

Illustration # 1

1852367
Emissary Armoire

Attach Side Panels, Stretcher, Shelf and Top Assembly

Parts required

A.	Top Assembly	1 pc	Y.	Flat Washers	4 pcs
B.	Top Side Panels	2 pcs	Z.	Eccentric Cams	6 pcs
E.	Top Stretcher	1 pc	Z1.	Connecting Bolts	6 pcs
F.	Shelf	1 pc	Z2.	Plastic Caps	6 pcs
V.	Long Phillips Pan Head Wood Screw	1 pc	Z4.	Allen Head Wrench	1 pc
W.	Allen Head Bolts	4 pcs	Z5.	Phillips Head Screwdriver	1 pc
X.	Lock Washers	4 pcs			

For steps 8 – 12 see Illustration #2 on page 7 of 9.

8. **Attach Top Side Panel (B)** With the Base Unit on back, screw the Connecting Bolts (Z1) into the pre-threaded inserts in the Center Panel (G). Insert the Eccentric Cams (Z) into the pre-drilled holes in one Top Side Panel (B). Make sure the "X" is facing out and the arrow points toward the pre-drilled holes in the edge of the Top Side Panel (B). Align the pre-drilled holes in the edge of the Top Side Panel (B) over the Connecting Bolts (Z1). Make sure the notched edge of the Top Side Panel (B) faces the back and the pre-drilled holes on the side surface are facing inwards. Secure in place by turning the Eccentric Cams (Z) in a clockwise direction using the Allen Head Wrench (Z4). Cover the Eccentric Cams (Z) with the Plastic Caps (Z2).
9. **Attach Shelf (F)** Insert the exposed dowels of the Shelf (F) into the pre-drilled holes in the Top Side Panel (B). Secure in place with the Allen Head Bolts (W), Lock Washers (X), and Flat Washers (Y) using the Allen Head Wrench (Z4). Do not fully tighten at this point.
10. **Attach Top Stretcher (E)** Insert exposed dowels of the Top Stretcher (E) into the pre-drilled holes near front edge at top of the Top Side Panel (B). Make sure the attached wooden cleat rail faces outward and door catches face inward.
11. **Attach remaining Top Side Panel (B)** Repeat steps 8 - 10 to attach the remaining Top Side Panel (B).
12. **Attach Top Assembly (A)** Align the pre-drilled holes in the Top Assembly (A) over the exposed dowels of the Top Side Panels (B). Secure in place using the Phillips Head Screwdriver (Z5) through the flushblock fittings, turning in a clockwise direction. Then secure the Top Assembly (A) to the Top Stretcher (E) with the Long Phillips Pan Head Wood Screw (V) using the Phillips Head Screwdriver (Z5). Now tighten all bolts. Stand unit upright.

1852367

Emissary Armoire

Attach Side Panels, Stretcher, Shelf and Top Assembly

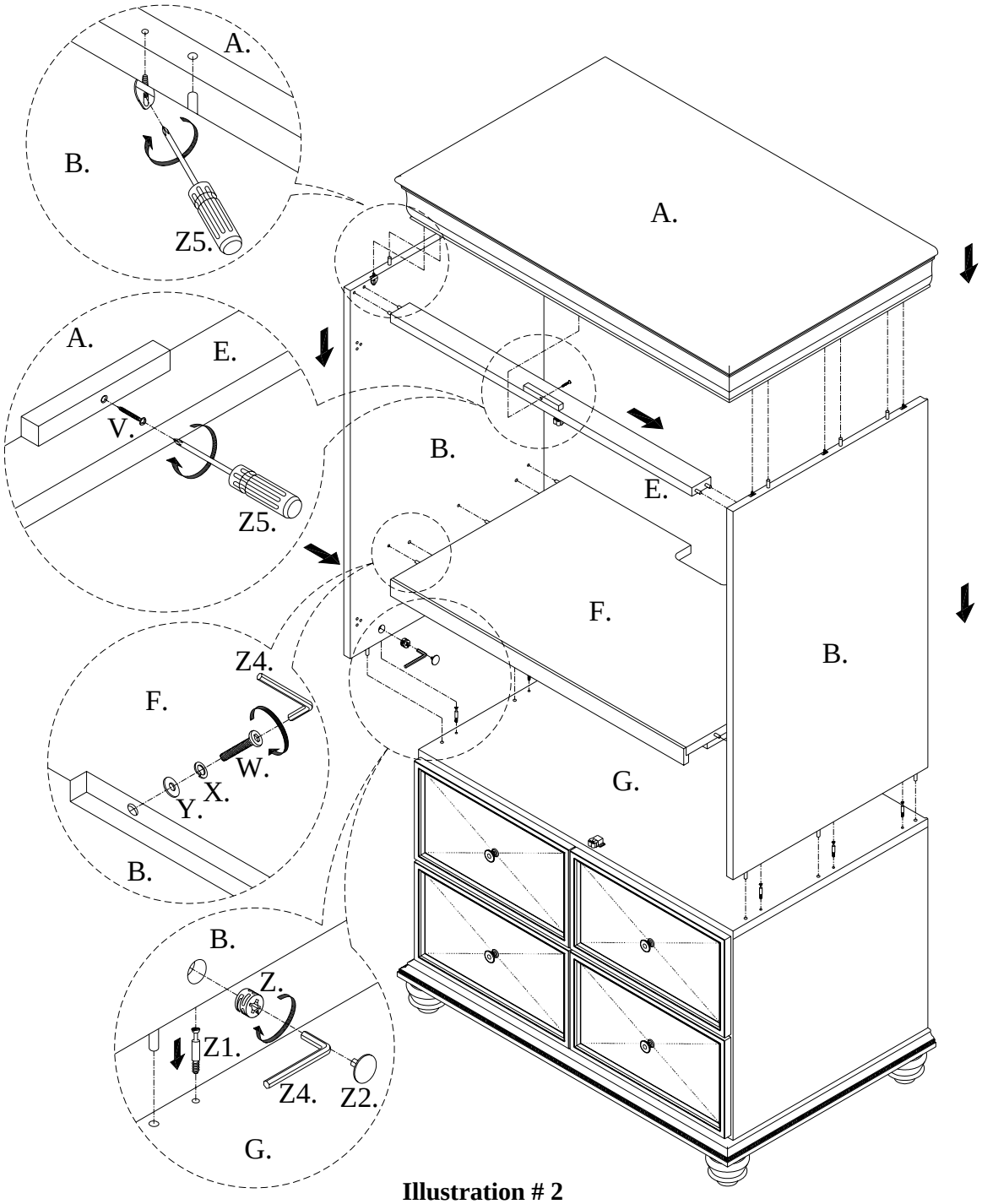

Illustration # 2

1852367
Emissary Armoire

Attach Top Back Panel

Parts required

C.	Top Back Panel	1 pc	Z5.	Phillips Head Screwdriver	1 pc
U.	Short Phillips Pan Head Wood Screw	24 pcs			

13. **Attach Top Back Panel (C)** Place the Top Back Panel (C) into the notches of the Top Side Panels (B), Top Assembly (A) and the Center Panel (G). Secure in place with the Short Phillips Pan Head Wood Screws (U) using the Phillips Head Screwdriver (Z5). See Illustration # 3.

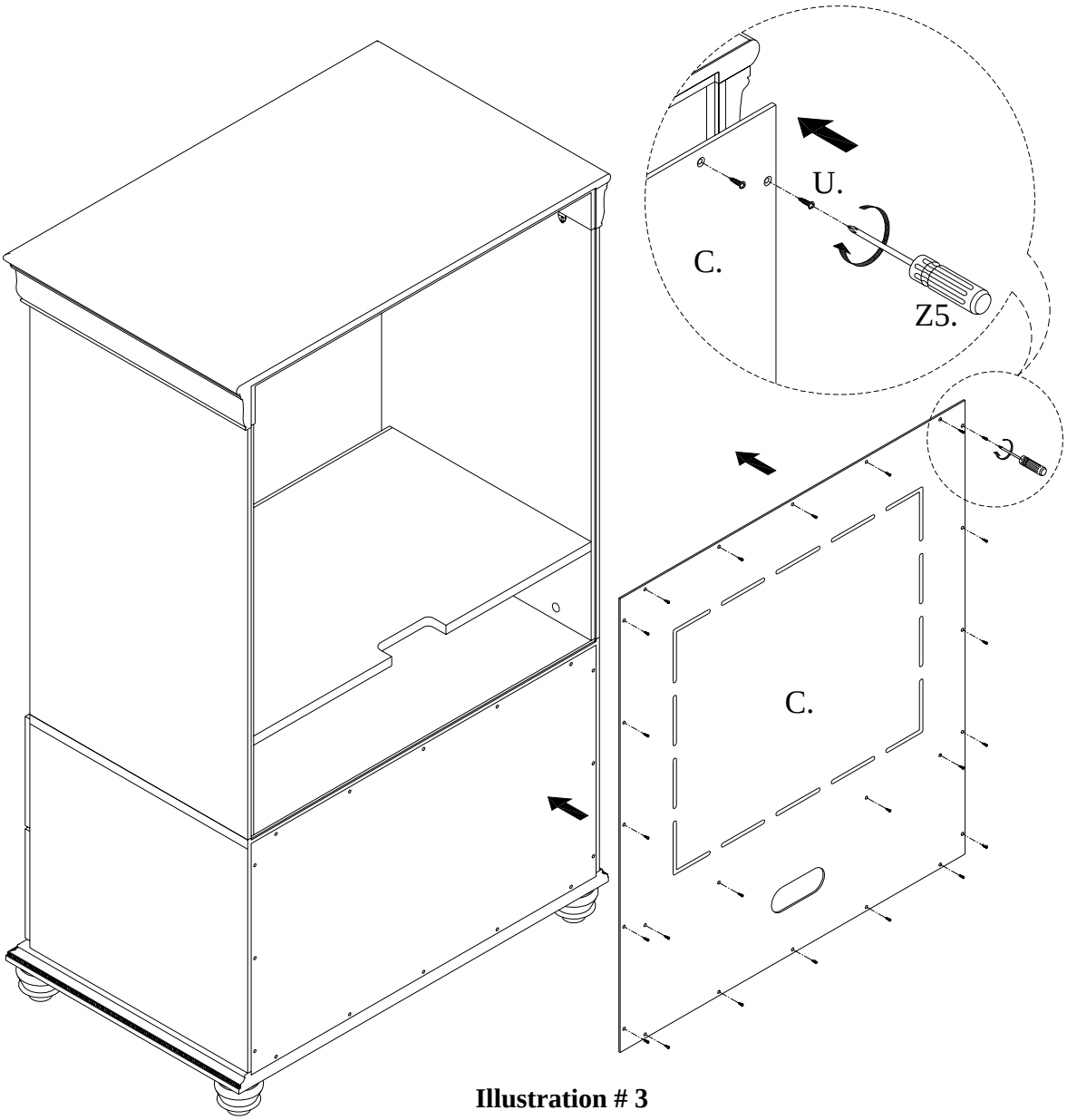

Illustration # 3

1852367
Emissary Armoire

Attach Doors and Door Pulls

Parts required

D.	Doors	2 pcs	S.	Short Phillips Flat Head Wood Screws	12 pcs
Q.	Door Pulls	2 pcs	Z5.	Phillips Head Screwdriver	1 pc
R.	Phillips Head Machine Screws	2 pcs			

For steps 14 – 15 see Illustration #4 on page 9 of 9.

14. **Attach Doors (D)** Align the holes in the hinges of the Doors (D) with the pre-drilled holes in the Top Side Panels (B). Secure in place with Short Phillips Flat Head Wood Screws (S) using the Phillips Head Screwdriver (Z5).
15. **Attach Door Pulls (Q)** Align the pre-threaded hole in the Door Pulls (Q) with the pre-drilled hole in the Doors (D). Secure in place with the Phillips Head Machine Screws (R) using the Phillips Head Screwdriver (Z5). See Illustration # 4.

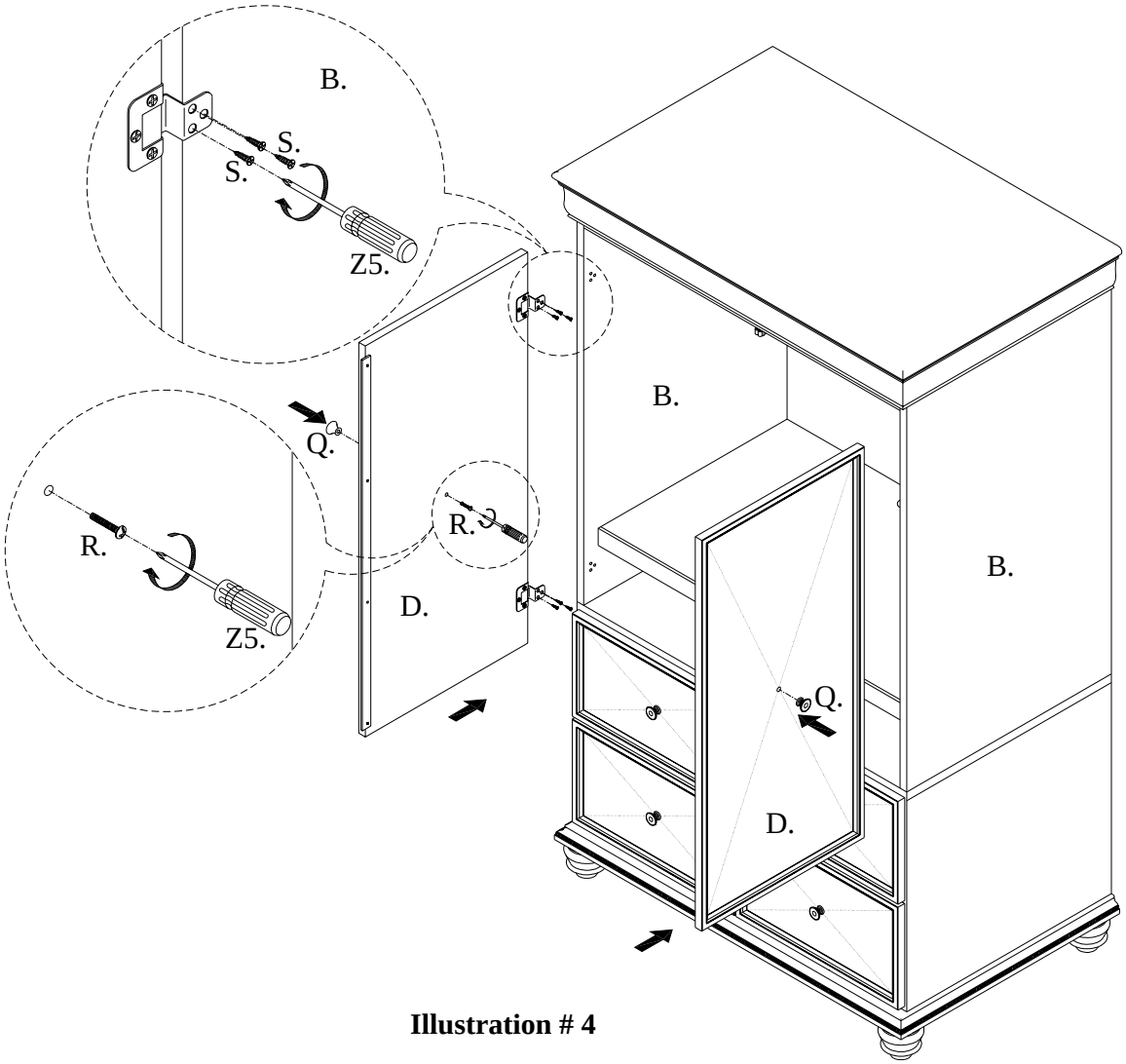

Illustration # 4